AVAILABLE COLORS:

108 BLACK | 232 WHITE | 764 PLATINUM | 270 GREIGE | 136 GRAY

*** CUSTOM COLORS ARE AVAILABLE AT AN ADDITIONAL CHARGE, SUBJECT TO MINIMUM QUANTITIES. ***

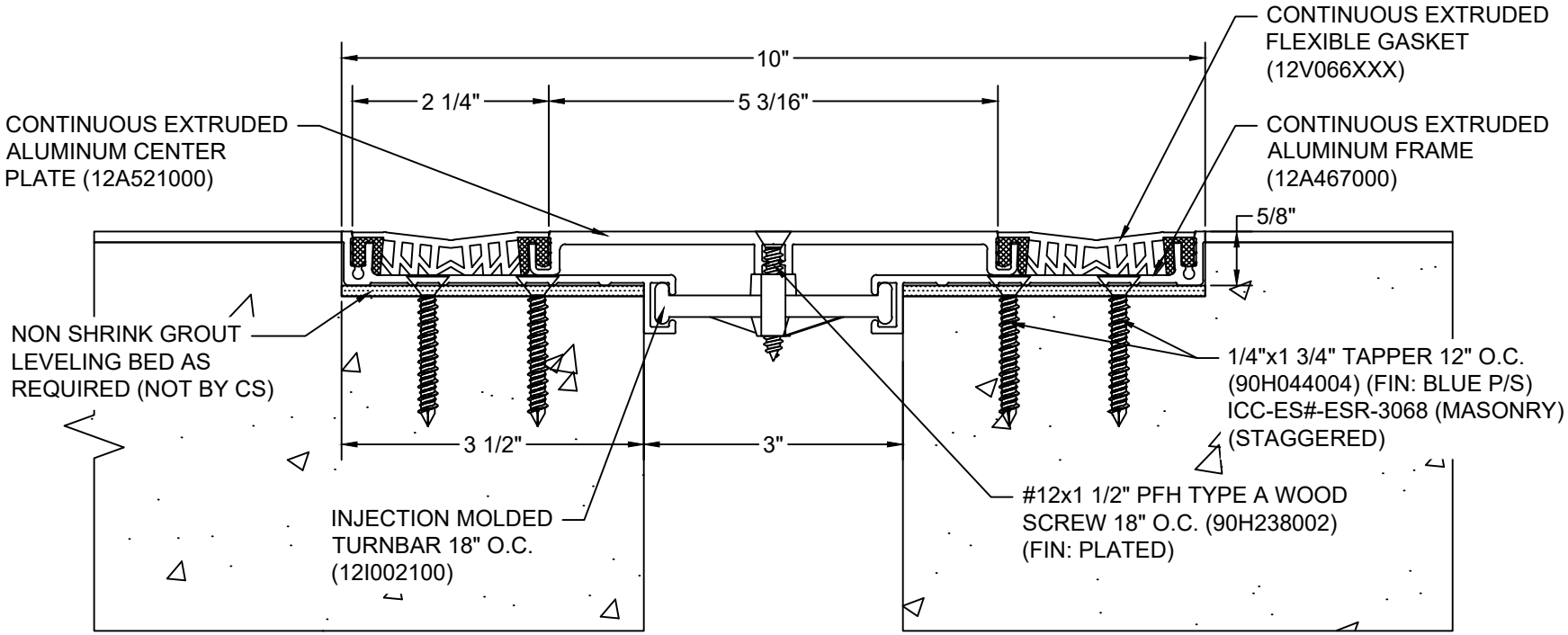

Model: **GTP-300**

Construction Specialties®
www.c-sgroup.com
6696 Route 405 Highway, Muncy, PA 17756
Phone: (800) 233-8493 / Fax: (570) 546-8022

895 Lakefront Promenade, Mississauga, Ontario L5E 2C2 Canada
Phone: (888) 895-8955 / Fax: (905) 274-6241

© Copyright 2018 Construction Specialties, Inc.

PROJECT:	SCALE: NTS
CUSTOMER:	DATE:
LOCATION:	JOB NO.:
DRAWN BY:	SHEET NO.:

E:\0-Std Master Files\0-STD Folder Files\GTP3.dwg, 7/25/2018 1:17 PM, Matt Owens